20 YEARS OF 3P EXPERTISE

STORMWATER TREATMENT PLANTS **2019 / 2020**

POTSDAM

MUNICH

SINGAPORE

NANJING

BRISBANE

DUBAI

WWW.**3PTECHNIK**.DE

3P Technik Filtersysteme GmbH

CONTENTS

20 YEARS AT THE TOP

2019
HYDROSHARK
Tested sedimentation plant

2018
HYDROSYSTEM 1500
Approved by the DIBt Z-84.2-22

2014
HYDROSYSTEM1500
Development

2012
HYDRO ROAD DRAIN
Approved by the DIBt Z-84.2-17

2012
HYDRO FILTER CHANNEL
Approved by the DIBt Z-84.2-10

2010
HYDROSYSTEM 400 and 1000
Registration for metal roof testing

2008
HYDROSYSTEM 1000
Approved by the DIBt Z-84.2-4

2008
HYDROSYSTEM 1000
with new filter recipe

2005
HYDROSYSTEM 1000
Development

1999
Development and tests of different substrates

REFERENCES

MORE THAN 1000 SYSTEMS SUCCESSFULLY IN OPERATION AROUND THE WORLD

GOTHENBURG

Sweden has more than 90,000 lakes. They are protected as far as possible, because standing water in particular is sensitive to anthropological influences. One of the first systems was installed on the site of a scrap metal recycling company in Gothenburg. **15 Hydrosystems 1000** protect a drinking water reservoir against high heavy metal contamination.

SINGAPORE

Everything revolves around water in Singapore. The city state has imported the majority from Malaysia so far, but self-supply is now becoming increasingly significant. Protection of the water is thus a high goal. The first **filter systems** were installed at the **Interpol Global Complex.** They have to prove their suitability here in tropical conditions under the watchful eye of the police.

BRISBANE

Airports have a particular effect on the stormwater run-off. Not only the aircraft taxiways, but above all the total traffic areas endanger the local bodies of water. The **Hydrosystem 1000** is thus being tested according to Australian testing regulations on the site of a car hire company in Brisbane. Groundbreaking for other airports.

SIPPY DOWNS

Over the last two decades Australia has developed into a pioneer in the handling of stormwater. Down under, every new system must be put through its paces before it can be used. **The Hydro Filter Channel** drain is being tested on the campus of the University of the Sunshine Coast. And from here the technology is spreading to Asia.

INGOLSTADT

The **Hydro Filter Channel** system was selected for the drainage of the production at AUDI AG in Münchsmünster near Ingolstadt. In total, 1.5 km of the gully system with filter function were planned for the 42-hectare site. The Ingolstadt-based car manufacturer is thus relying on an innovative filtration solution for the drainage. **Audi employs future technologies – in drainage too.**

SCHLESWIG

The rainwater runoff from the lead roof and the facade of the **Haithabu Viking Museum** in Schleswig is treated by **3 filters of the type Hydrosystem 1000** metal and subsequently allowed to seep towards the groundwater in three underground infiltration ditches next to the building. Water samples can be taken from a control shaft at the outlet and tested for lead concentration.

POTSDAM

In total, **15 filter shafts of the type Hydrosystem 1000** metal were installed in the **Brandenburg State Parliament in Potsdam.** The connected areas amount to about 4,000 m² copper roof and about 4,500 m² courtyard area.
The stormwater is not diverted into a seepage system after cleaning, but into a stormwater sewer from where it runs into the nearest receiving sewer.

MUNICH

The historic building of the **Bavarian Government** on Maximilianstrasse in Munich has a copper roof. Since the water seeps into infiltration ditches on site, it must first be freed from copper so that the groundwater is not contaminated. **Several Hydrosystems 1000 and 1500** with filters of the type metal were used to ensure the long-term sustainable protection of the groundwater.

NANJING

Trailblazing architecture is almost always linked to sustainability nowadays. A good example of this is the **Olympic Youth Center** in Nanjing, China, which was designed by Zaha Hadid Architects. The stormwater from the roofs and open spaces is collected and cleaned by **Hydrosystems of the type roof** before being stored in cisterns and subsequently used as industrial water.

DUBAI

Al Habtoor City is the name of a new district in Dubai that combines top-notch architecture with sustainability. Here, too, a total of **9 Hydrosystems 1000** clean the water from roofs and patios before it is stored in cisterns. Water is precious in the United Arab Emirates and the use of stormwater is deeply rooted in the culture of the Gulf States.

CHAM

In Switzerland, the water from streets with a traffic volume from a certain minimum upwards must be collected and treated before being discharged. That is often not particularly easy when it comes to existing streets. Retrofitting with **filter systems** is the ideal solution if no space is available above ground. Implemented at the Alpenblick intersection in **Cham.**

LAKE ZURICH

Lake Zurich is the chosen home of celebrities such as Tina Turner. One of the reasons is no doubt the crystal-clear water, which enjoys maximum legal protection in Switzerland. The cantonal road around the lake with its high traffic volumes threatens the idyll. The water from the first sections is thus cleaned by systems of the type **Hydrosystem 1000.**

MICROPLASTICS IN GERMANY

THE 10 MOST SIGNIFICANT SOURCES
QUANTITIES RELEASED ANNUALLY PER PERSON IN GRAMS

2/3 of the entire microplastics are discharged into bodies of water via road run-offs!

1.230
Tyre wear debris
(of which 88% from cars)

230
Pellet losses
(production-related)

180
Bitumen wear debris
in asphalt

165
Release during
refuse disposal

110
Wear debris
from shoe soles

80
Fibre wear debris
when washing textiles

120
Release on
building sites

100
Wear debris from
plastic packaging

130
Windblown dispersal from
sports and playgrounds

90
Wear debris from
road markings

Source:
Fraunhofer UMSICHT 2018;
own representation

STORMWATER TREATMENT

PRINCIPLES OF THE BASIS OF ALL LIFE

WHY DO WE NEED TO TREAT STORMWATER?

The collected and discharged stormwater runoff from paved surfaces are regarded by law in Germany as **wastewater**. This sounds incomprehensible, because stormwater initially appears to be quite clean. However, it is actually the **main cause of the contamination** of our bodies of water.
This applies to surface waters such as streams, rivers and lakes as well as to the groundwater, because ever greater portions of the stormwater are discharged into the substrate via seepage systems. The topic thus directly affects our most important foodstuff: **drinking water.**

ORIGIN OF THE SUBSTANCES

The substances in the stormwater run-offs from paved surfaces originate from precipitation **(wet deposition),** from the deposition of substances during dry periods **(dry deposition)** and from the material and use of the surfaces themselves. Whereas roof run-offs have a relatively low concentration of pollutants, traffic surfaces such as roads and car parks are heavily contaminated. This results, for example, from wear debris from the road surface and the tyres, the wear debris from brake pads and brake discs, dripping losses, corrosion products and exhaust gases. Above all, heavy metals, mineral oil hydrocarbons, polycyclic aromatic hydrocarbons and nutrients such as phosphate and nitrate are found. These are joined in winter by de-icing salt. And traffic surface run-offs are the **main source of the microplastics** that get into our bodies of water.

DECENTRALISED TREATMENT PLANTS

The decentralised treatment of stormwater runoffs has become increasingly important in recent years. From the aspect of both water protection and economics, decentralised systems could be a good alternative to the predominant centralised systems such as stormwater purification basins and retention soil filters. This applies both to pre-cleaning before seepage and to treatment measures prior to discharging into surface waters.
In future it should be more the case that **only the polluted portion of the stormwater run-off** is treated instead of mixing dirty and relatively clean water and cleaning them together.

STORMWATER TREATMENT PROCESS

The cleaning of the contaminated stormwater is not so simple, because there are both solids and dissolved substances in the run-off and their removal necessitates different processes. Most systems operate according to the following **work mechanisms:**

- **Screening** (e.g. screening bucket in road drain, gully)
- **Surface filtration** (e.g. geotextile filter bag)
- **Deep filtration** (e.g. filter medium, soil)
- **Sedimentation** (e.g. sedimentation system, lamella clarifier)
- **Light material separation** (e.g. oil separator)
- **Biological conversion** (e.g. soil filter)

SYSTEM TYPES

Decentralised systems can be **laminar** (water-permeable paving with cleaning function), integrated in **drainage gullies,** integrated in **road drains** or installed in **shaft structures** of different sizes. The differences lie in the sizes of the areas to be connected, the height loss and the maintenance intervals.

PRINCIPLES

DISCHARGE INTO SURFACE WATERS

WHICH 3P PRODUCT DO I NEED AND WHEN?

If the rain run-off is to be discharged into a **surface water**, somewhat different options are possible. Water protection zones must be considered separately, however.

Precipitation on:
roofs, gardens

Needed here:

no treatment
(exception: metal roofs)

Precipitation on:
Traffic areas with
low traffic volume

Needed here:

HYDROSHARK

Sedimentation gully

Precipitation on:
Traffic areas with
high traffic volume

Needed here:

HYDROSHARK

HYDROSYSTEM

HYDRO FILTER CHANNEL

Precipitation on:
Commercial areas

Needed here:

HYDROSHARK

HYDROSYSTEM

HYDRO FILTER CHANNEL

Precipitation on:
Industrial areas

Needed here:

HYDROSYSTEM

HYDRO FILTER CHANNEL

HYDRO ROAD DRAIN

SEEPAGE INTO THE GROUNDWATER

WHICH 3P PRODUCT DO I NEED AND WHEN?

If the rain run-off is to seep into the **groundwater**, it usually has to be treated upstream of underground seepage systems such as infiltration ditches or shafts. There are several options for this.

Precipitation on:
roofs, gardens

Needed here:

no treatment except in
Baden-Württemberg
(exception: metal roofs)

Precipitation on:
Traffic areas with
low traffic volume

Needed here:

HYDROSHARK

Sedimentation gully

Surface covering

Precipitation on:
Traffic areas with
high traffic volume

Needed here:

HYDROSYSTEM

HYDRO FILTER CHANNEL

HYDRO ROAD DRAIN

Surface covering

Precipitation on:
Commercial areas

Needed here::

HYDROSYSTEM

HYDRO FILTER CHANNEL

HYDRO ROAD DRAIN

Surface covering

Precipitation on:
Industrial areas

Needed here:

HYDROSYSTEM

HYDRO FILTER CHANNEL

HYDRO ROAD DRAIN

Surface covering

Sewers

PRACTICAL TEST: WATERPROOF

FIELD TRIALS SUPPLEMENT APPROVALS

LEADING THROUGH RESEARCH

Apart from the Bavarian approval for metal roof runoffs, most approval procedures for stormwater runoffs are based first and foremost on **laboratory tests**. However, the results of laboratory tests and the performance of the systems on site cannot always be compared. The laboratory tests therefore represent a good basis for testing the general functionality of decentralised systems. For safe use, however, supplementary in-situ measuring programmes are unavoidable. Therefore, all 3P plants were also **tested under real conditions.** A selection of the tests can be found here. We will be glad to send you the associated reports and expert's opinions on request.

HAMBURG-HARBURG

The stormwater run-off from the **Bremer Strasse** (B 75) in Hamburg runs from an area of about 2,300 m2 near the Eissendorfer Forest into a lake. In order to protect this lake, the collected water is initially fed into a sedimentation shaft with a coarse screen. From here it is fed into two filter shafts of the type **Hydrosystem 1000.** The system was installed in December 2006 and tested over a period of three years. The results of the tests show that virtually **all relevant substances are removed to a high degree from the stormwater runoff.** The retention capacities of the filter system had not yet been exhausted after three years of operation. The results show no significant increase in the concentrations over time. Following the evaluations of the flow rates, the permeability of the filter must also be described as adequate.

WUPPERTAL

The **Hydrosystem 1000** was examined from July to November 2009 by **Dr. Pecher AG** at a stormwater purification basin in Wuppertal in accordance with the requirements of the NRW separation decree (circular decree of 26 May 2004) „Requirements for stormwater drainage in the separation method". The retention of solids (TSS) was 57%. For test reasons, however, the system was subjected to a fixed rainfall corresponding to 2.4 times the critical rainfall. 1.2 times the annual rainfall quantity was applied. If real rainfalls are fed to the filter system, a considerably higher TSS retention and an extension of the service life can be expected, depending on the characteristics of the catchment area. The efficiencies of the filter system and a stormwater purification basin with regard to the retention of solids are comparable according to the available results; the system is therefore **usable in accordance with the NRW regulations.**

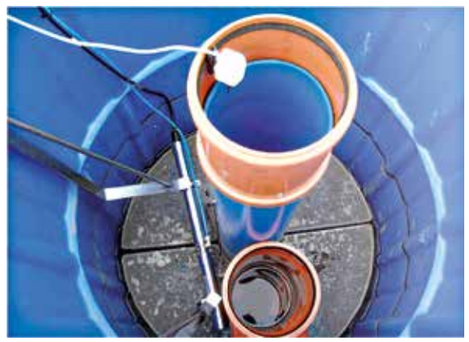

GIESSEN

Within the scope of a project sponsored by the **Hessian Ministry of Science and Art**, an extensive measurement programme for the determination of performance was carried out on a semi-central system for the treatment of polluted runoffs from traffic areas. The two-part system consisting of a **sedimentation stage and a filtration stage** was installed on the A 485 motorway near Giessen. Over the course of the 17-month examination phase, 41 samples were collected from the inlet and outlet of the system and analysed for various quality parameters.

From a structural point of view, the development of the system described marks the **successful closing of the gap** between decentralised systems (which are often only designed for a few 100 m²) and central systems (for the connection of several hectares). A further system size is now available, whose installation is possible in condensed urban areas or at certain points with particular load situations.

GARCHING

Rainwater runoffs from metal roofs made of uncoated zinc, copper or lead contain high concentrations and loads of the respective heavy metals.
In Bavaria they have to be treated as they may not be discharged to an excessive degree into groundwater or surface waters. Such treatment plants can be awarded a general building authority approval according to Art. 41f BayWG (Bavarian Water Act), which is intended to ensure that the filter systems work permanently in the sense of water protection. The test for the approval takes place on a **real system in a field trial** over a period of one year, which must be carried out by an independent institute. The **3P Hydrosystem metal** was tested from September 2009 until August 2010 at the Technical University of Munich on a zinc roof in accordance with the test conditions of the state of Bavaria.
Two systems of the type metal were installed on a 260 m² zinc roof area, each receiving the rain run-off from a roof area of 130 m².
The retention rate must be at least 90% for use on zinc roofs and at least 97% for use on copper roofs. **This was proven to be the case.**

KÖNIGSWINTER

A **3P filter system** was put into operation in October 2009 as part of a **research project of the State of North Rhine-Westphalia.** Operational monitoring took place until March 2010 at intervals of approx. one week by employees from Grontmij GmbH, which had been hired to carry out the practical examinations within the scope of the research project. A probe for monitoring the overflow and the readout of the data was operated by employees from the Königswinter municipal utilities. In order to be able to evaluate the emergency overflow behaviour, precipitation events recorded by the nearby sewage treatment works by means of a pluviograph were evaluated.
No irregularities were found during the weekly check in the first months of operation. The autumn and the long-lasting winter period (grit) were **not a problem** and cleaning had not been necessary up to the time of writing the report. Even an increased load in spring on account of pollen did not lead to any negative effects like those observed in other systems in the project.

INTERNATIONAL TEST PROGRAMMES

Decentralised systems also have to prove their functionality in foreign countries. This also makes sense, as the **climatic conditions** frequently differ significantly from those in Germany. Some examinations from **Australia and Switzerland** are illustrated below as examples.

SIPPY DOWNS, AUSTRALIA

The present rules in Australia foresee the testing of decentralised stormwater treatment plants in field trials. The method of taking samples is precisely specified. Filtrable substances, total phosphor and total nitrogen are the decisive parameters for the test. To make matters more difficult, not only do a certain number of rain events have to be evaluated, but also only certain rain events qualify. This means that there was a certain dry period before the event and that the event had a certain duration and a certain rainfall level. Many event results are thus omitted and may not be used for the evaluation.

As it does not rain very often in **Queensland**, an in-situ test accordingly takes a long time. The **Hydro Filter Channel** was tested on the campus on the **University of the Sunshine Coast** in Sippy Downs. Fortunately, a sufficient number of **qualified events** had been sampled after just 1½ years of the measuring programme, allowing the system to be used in Australia.

MEILEN, SWITZERLAND

Shaft systems and road drains for stormwater treatment from **3P Technik Filtersysteme GmbH** were installed during the renovation of **Seestrasse/ Dorfstrasse in Meilen on Lake Zurich.** Due to the cramped spatial conditions, it was decided to employ decentralised treatment of the surface water from the traffic area of the 600 metre long construction section. The majority of the existing pipelines could be used, as areas of up to 2000 m² can be merged with the 3P systems as twin and triple shafts. Following treatment, the water is discharged directly into Lake Zurich. The shaft outlets were partly equipped with backflow flaps. Above all, the decentralised solution makes the system a cost-effective variant.
Two of the systems were sampled on behalf of the canton Zurich by wst21 GmbH over a period of one year in order to prove their suitability in accordance with the requirements of the **Swiss water laws.**

BUOCHS, SWITZERLAND

The Swiss government passed the Federal Water Protection Act in 1991. It was revised in 2010 and adapted to the new requirements and possibilities. Today, the cleaning of wastewater from roads in Switzerland still mainly takes place using road wastewater treatment plants. However, they require a great deal of space and much maintenance.
In order to test an alternative to these centralised systems, a **Hydrosystem** was installed in February 2008 in the town of **Buochs in the canton Nidwalden.** It was virtually predestined for this with its outstanding filtration properties, low space requirements, resistance to frost and protection against the precipitation of already bound pollutants by de-icing salt.

This pilot project was made possible by the **conversion of a crossroads** into a roundabout. The **Hydrosystem heavy traffic** was subjected to an endurance test from February 2008 to November 2010 in order to demonstrate its performance and to emphasise the possibilities of this system and the associated benefits. **Outstanding results** were achieved in November 2010 at the first sampling following the installation:
All values lay within or below the tolerance range. The system operated without extensive and complex maintenance. It wasn't even affected by lengthy cold spells. In Switzerland too, these properties make the Hydrosystem a reliable, ecological and economical partner in attaining the goals set by the government and following generations.

SEDIMENTATION SYSTEMS

BASICALLY A CLEAN JOB

REQUIREMENTS

Sedimentation systems remove solids **(total suspendible solids solids (TSS))** from the stormwater run-off. By definition this means all substances that are larger than 0.45 µm. Of importance for bodies of water are above all the fine particles smaller than 200 µm, as they contain the majority of the pollutants, such as heavy metals, hydrocarbons and polycyclic aromatic hydrocarbons. Microplastics also fall under TSS (filterable solids); tyre wear debris, for example, makes up the largest portion of these that are discharged into bodies of water.
The TSS parameter has been important up to now for the assessment of the performance of sedimentation systems, but it does not specify a largest grain size. As this is not very meaningful, because virtually all ultra-fine particles contain pollutants, the **TSS_{fine}** parameter was initially introduced into some test regulations and rules (e.g. construction and testing principles of the German Institute of Building Technology, separation decree of the State of NRW). This refers to particles smaller than 200 µm. Because the ultra-fine particles above all contain the majority of the pollutants, however, a new parameter designated **TSS63** is currently being integrated into the rules. Thus in future only the relevant solids are to be evaluated. The method of measuring **TSS63** from real stormwater samples is still disputed, but such solids can already be simulated very well in the laboratory with a quartz flour.

DWA M 153

Data sheet M153 does not contain any concrete specifications for the TSS retention. Instead, a **points method** is used that takes up the substance load of the run-offs in a fictitious parameter than cannot be determined on the basis of measured data. A reduction factor - the so-called **transmission value** - is used for stormwater treatment plants. In order to determine a transmission value for systems that are not contained in the tables in the data sheet, the only remaining option is a comparison of the performance with systems existing in the data sheet.

NRW SEPARATION DECREE

The **stormwater regulation of the State of NRW** demands that stormwater treatment plants demonstrate at least the same degree of material retention as state-of-the-art centralised systems. In this case the state of the art is the **stormwater purification basin (RKB).** A testing regulation of the **State Office of Nature, Environment and Consumer Protection North Rhine-Westphalia (LANUV)** additionally applies to decentralised systems. This states that the systems must attain a degree of TSS retention of at least 50% in a laboratory test.
In addition, an in-situ examination is demanded in order to be put on the list of the State Office on Nature, Environment and Consumer Protection NRW (LANUV).

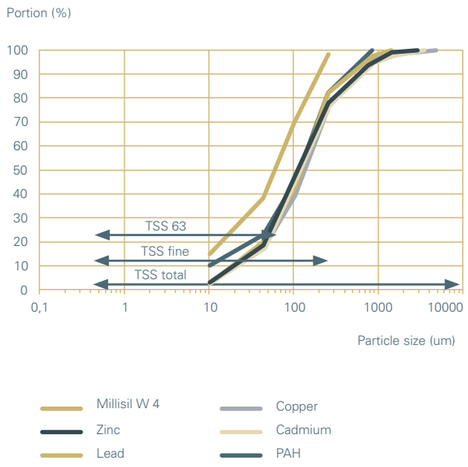

DWA A 102 (YELLOW PAPER)

In future the new **DWA worksheet A 102** for stormwater treatment is to apply. It is currently going through the „yellow paper" procedure. This adopts the **TSS63** parameter as a **main parameter.** A target value of max. **50 mg/l or 280 kg/(ha·a)** is specified for discharge into surface waters. Category-2 surfaces have a load of 530 kg/(ha·a), therefore the retention rate of a treatment plant must mathematically be at least **53%**. For Category-3 surfaces with an assumed 760 kg/(ha·a), a mathematical retention rate of at least **63%** TSS63 applies.

NJDEP COMPLIANT

HYDROSHARK

THE SEDIMENTATION PLANT THAT BARES ITS TEETH

- ***Physical treatment of stormwater***
- ***Removal of solids (TSS)***
- ***Underground system, hence no space requirement above ground***
- ***No height offset between inlet and outlet***
- ***Simple inspection and maintenance***
- ***Different sizes***
- ***No blocking possible***

The Hydroshark sedimentation plant reliably removes filterable solids (TSS) from the rain run-off. It thus protects bodies of water and seepage systems.
The water is initially fed tangentially into the centre of the system, where the sedimentation of the solids takes place by means of the so-called teacup effect. The solids sink into the sludge trap below, which is hydraulically separated from the treatment chamber by flow breakers so that remobilisation of the settled particles cannot occur in case of heavy rain. The water subsequently flows evenly upwards in the outer ring of the system. A serrated weir ensures that no short-circuit flows arise in the system and that the most homogeneous flow possible prevails.
The water then subsequently flows over the serrated weir into the outlet. Lightweight substances such as oils or pollen are effectively retained as they cannot pass through the separation wall.
There is no height offset between inlet and outlet. The system cannot block.
The system can be used for all areas, from roof areas to traffic areas and industrial areas. The cleaning performance is designed such that the requirements of M 153, the future A 102 and the NRW separation decree are met.

NJDEP COMPLIANT

TECHNICAL DATA

- **Internal diameter of the concrete or plastic shaft:** 1.0 m to 3.0 m
- No height loss between inlet and outlet
- **Connectable area:** 2,000 m² to 22,000 m² depending on the degree of treatment level
- **Maximum treatment level:** 9 l/s - 122 l/s

APPROVALS AND VERIFICATIONS

- Transmission value according to **DWA M 153** D = 0.35 (field D25) for connectable areas according to table, r_{crit} = r(15.1), here with 150 l/(s·ha) for simplification
- Transmission value according to **DWA M 153** D = 0.50 (field D24) for connectable areas according to table, r_{crit} = 45 l/(s·ha)
- Tested in the laboratory on the basis of the requirements for **DWA A 102** with **TSS63** (retention of TSS63 > 55 % for Category 2 areas, > 70% for Category 3 areas)
- Laboratory test according to **NRW regulations decree** with **TSS200** according to the modified DIBt method
- Tested according to the American **NJDEP** protocol

FUNCTIONAL PRINCIPLE

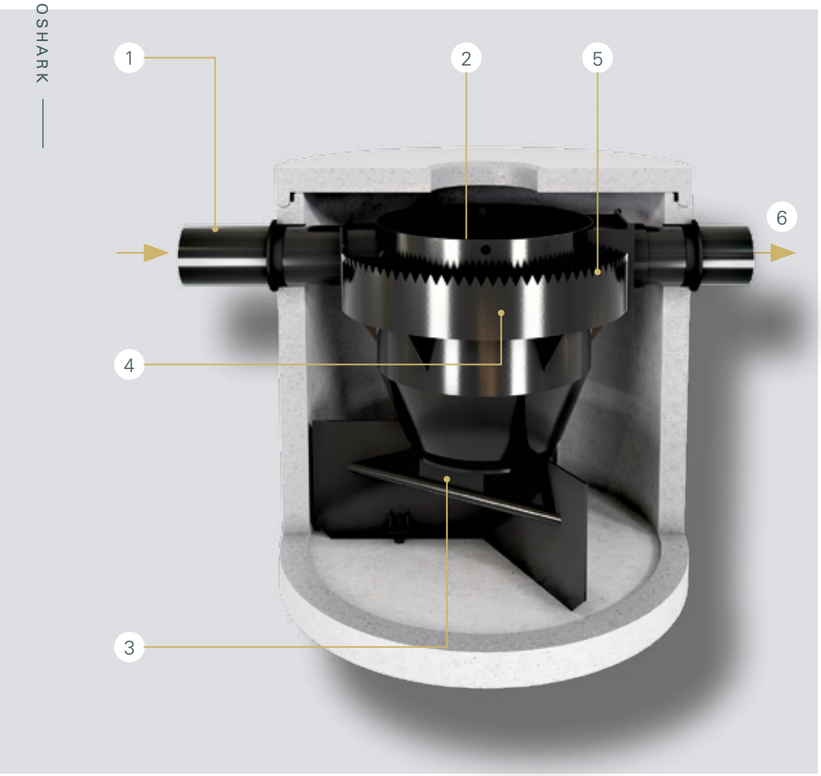

1. The water flows tangentially into the centre of the **hydro-dynamic separator.**
2. **Solids** settle at the bottom, **floating matter** remains on the surface of the water.
3. The solids are collected in the **sludge trap**, which is separated hydraulically from the treatment chamber by flow breakers and a grating so that no re-dissolving occurs.
4. The **water rises** evenly at the side walls.
5. The cleaned water flows over a **serrated weir** and is collected via in a ring chamber and then transported to the outlet.
6. The water drains off.

3P HYDROSHARK 1000

For installation in a concrete shaft DN 1000

MTFR: 20 l/s
Max. hydraulic load: 40 l/s

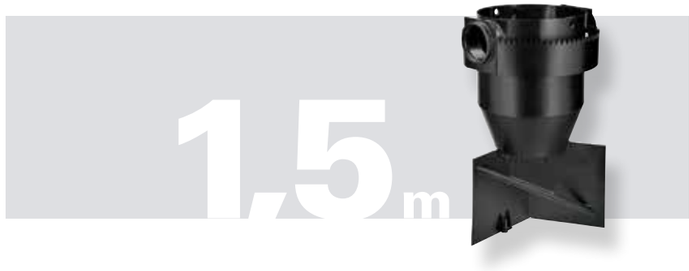

3P HYDROSHARK 1500

For installation in a concrete shaft DN 1500

MTFR: 45 l/s
Max. hydraulic load: 98 l/s

3P HYDROSHARK 2000

For installation in a concrete shaft DN 2000

MTFR: 80 l/s
Max. hydraulic load: 147 l/s

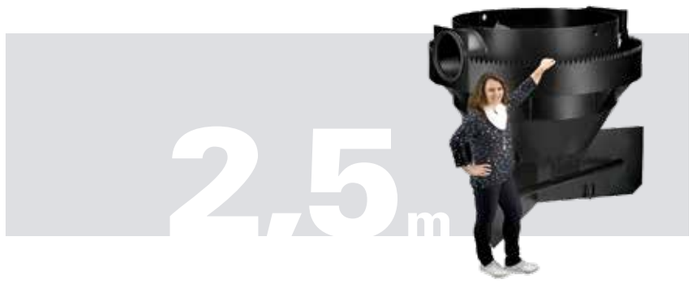

3P HYDROSHARK 2500

For installation in a concrete shaft DN 2500

MTFR: 125 l/s
Max. hydraulic load: 220 l/s

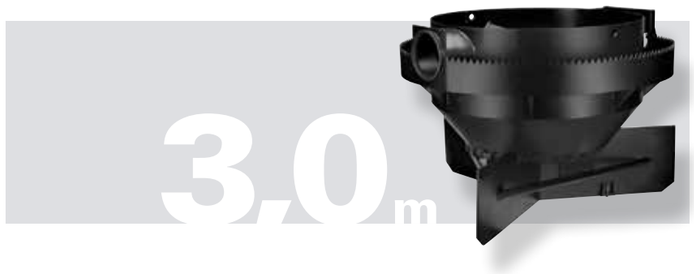

3P HYDROSHARK 3000

For installation in a concrete shaft DN 3000

MTFR: 180 l/s
Max. hydraulic load: 378 - 425 l/s

GERMAN DIBT APPROVAL

GERMAN LFU METAL ROOF APPROVAL

NJDEP COMPLIANT

HYDROSYSTEM 1000

UNDERGROUND SYSTEM, ABOVE-GROUND QUALITY

- *Cleaning of stormwater runoffs from traffic areas, industrial areas and metal roofs*
- *Underground system, no space requirement*
- *Low height offset*
- *Simple inspection and maintenance*
- *Filter material in exchangeable cartridges*
- *Cartridge exchange interval every 3 – 5 years*
- *Connectable area 500 - 1,000 m²*

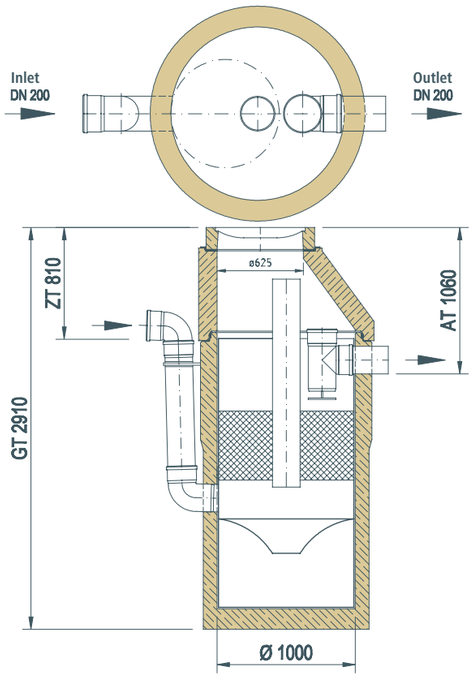

The Hydrosystem 1000 combines sedimentation processes with a filter stage. The stormwater is cleaned by sedimentation, adsorption, filtration and chemical precipitation.

A hydrodynamic separator brings about the sedimentation of solids in a radial flow regime characterised by secondary flows.Through the effect of the separator, the solids enter the flow-calmed sludge trap located underneath the separating funnel. There are 4 filter elements underneath the separation chamber. The water flows upwards through the four filter elements. The system removes pollutants such as heavy metals, mineral oil hydrocarbons and polycyclic aromatic hydrocarbons from the stormwater.

Apart from that it binds nutrients such as phosphates. The quality of the cleaned water is so high that it can be discharged directly into the seepage or any receiving sewer.

The height difference between inlet and outlet is only 25 cm. As the system is installed under the traffic area, it needs no additional space on the property or in the road space.

The treatment plant can be used with traffic areas such as car parks and roads with all volumes of traffic, industrial areas and metal roofs. Four different filter cartridges are available for this.

TECHNICAL DATA

- **Internal diameter of the concrete or plastic shaft:** 1.0 m
- **Minimum pressure loss between inlet and outlet:** 25 cm
- **Connectable area:** 500 m² to 1000 m² depending on the degree of treatment level
- **Maximum flow rate:** 35 l/s
- **Maximum filtration capacity:** 12 l/s

APPROVALS AND VERIFICATIONS

- General building authority approval from the **DIBt** for seepage Z-84.2-4
- Tested in accordance with **NRW regulations**, on **LANUV list**
- Approved in accordance with the **Bavarian Water Act for metal roof run-offs**
- Independent **in-situ** measurement results from different countries are available
- Tested in accordance with the **NJDEP** protocol

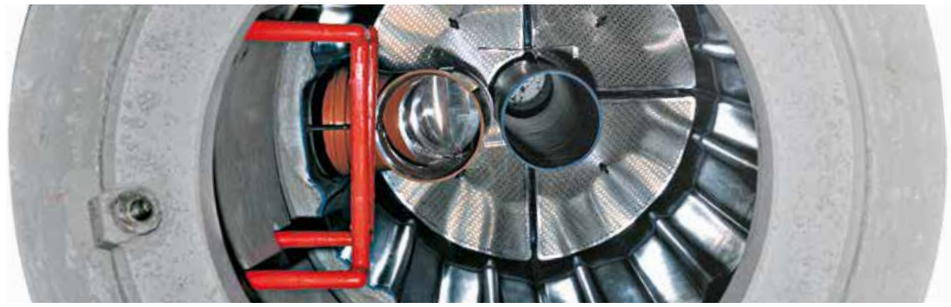

FUNCTIONAL PRINCIPLE

1. The stormwater from the area to be drained is fed in at the lower end of the **shaft**. The water is tangentially deflected by the deflector.
2. Here, the sedimentation of particles and in particular the sand fraction takes place in a **hydrodynamic separator** on account of turbulent secondary flows in a radial laminar flow regime.
3. The particles are caught in a **sludge trap** underneath the system via an opening in the lower part of the cleaning shaft. The sludge trap is evacuated at intervals.
4. There are four **filter elements** in the centre of the cleaning shaft, with which the fines are filtered in an upward flow process and the majority of the dissolved pollutants are precipitated and adsorptively bound. The filter can be backwashed from above and is easy to replace in case it is fully silted up.
5. The **filter elements** are easy to remove via the existing shaft opening.
6. The clean water is located above the filter elements; it passes through an oil separator and then flows via the **outlet** into the seepage or a surface water.

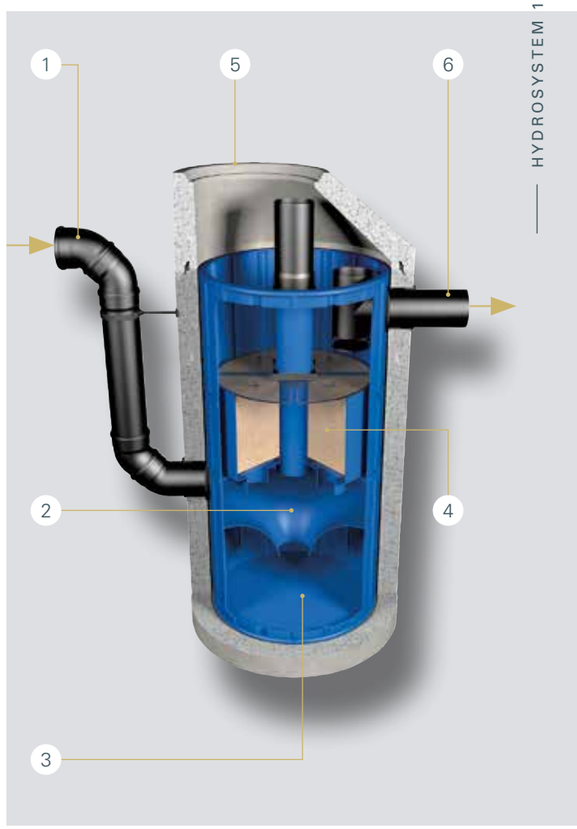

GERMAN DIBT APPROVAL

GERMAN LFU METAL ROOF APPROVAL

NJDEP COMPLIANT

HYDROSYSTEM MULTIPLE SYSTEMS

A LOT HELPS A LOT

- *Combination of 2 to 5 systems of the type Hydrosystem 1000*
- *Enlargement of the connected areas by up to five times*
- *Plug-and-Play solution in one structure*
- *Homogeneous feeding of all systems guaranteed*
- *Fewer operating points in practice*

For larger connection areas, 2 to 5 Hydrosystems 1000 can be combined in a single shaft structure.

The inlet is in the centre; all systems are homogeneously fed due to the layout of the pipes. The multiple systems are completely connected, piped and equipped with a base plate in the factor There is only one inlet and one outlet. The systems can thus be installed on the building site in a single shaft of the appropriate dimensions in a plug-and-play process.

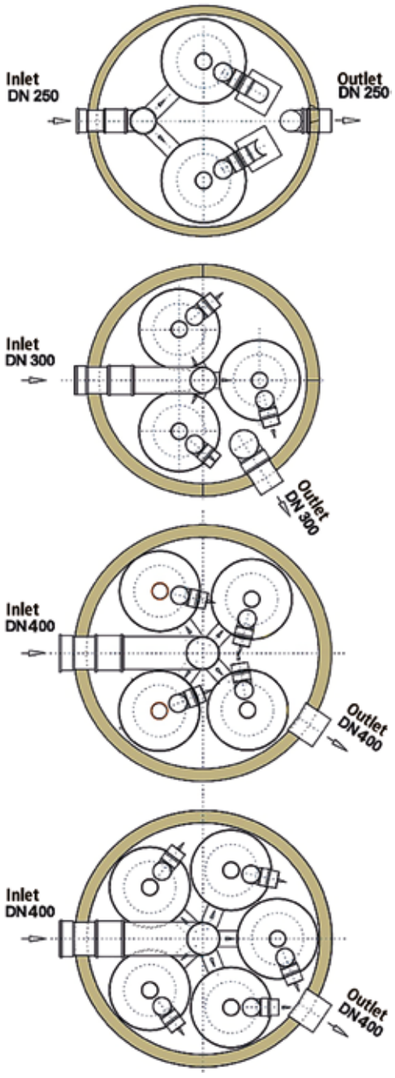

TECHNICAL DATA

- **Internal diameter of shaft:** 2.0 to 3.0 m
- **Minimum pressure loss between inlet and outlet:** 25 cm
- **Connectable area:** 1000 m² to 5000 m² depending on the degree of streatment level
- **Maximum flow rate:** 175 l/s, maximum
- **Maximum filtration capacity:** 60 l/s

APPROVALS AND VERIFICATIONS

- Tested in accordance with the **Bavarian Water Act for metal roof run-offs**
- Tested according to requirements of **DWA A 102**
- Laboratory test in accordance with **NRW separation decree**
- Tested in accordance with the **NJDEP** protocol

GERMAN DIBT APPROVAL

NJDEP COMPLIANT

HYDROSYSTEM 1000 2.0

HYBRIDSYSTEM FOR HIGHER PERFORMANCE

- *For rain run-offs with high TSS concentrations*
- *Two-stage sedimentation for high retention performance*
- *Plug-and-Play solution in one structure*
- *Extendable as required*
- *Homogeneous feeding of all systems guaranteed*
- *Fewer operating points in practice*

Where there is a high concentration of total sauspendable solids, the sedimentation capacity of the systems can be increased by an upstream pre-sedimentation unit.

In this case the hydrosystem is installed in an outer shaft with a larger diameter. The inflowing water is initially fed tangentially into the outer shaft, where the coarse solids settle. The water then flows via an immersion pipe into the second sedimentation stage of the Hydrosystem. From this point on the treatment is the same as with the Hydrosystem 1000. The outlet is piped and fed directly through the outer shaft. In this way the connectable area per system can be doubled. Multiple systems are also easily possible.

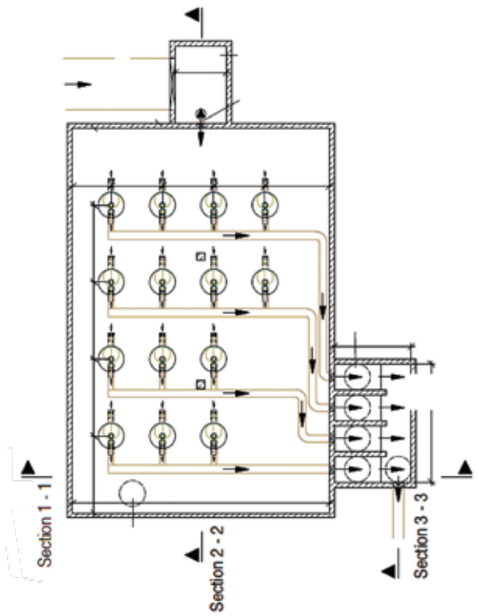

TECHNICAL DATA

- **Internal diameter:** 1.0 m
- **Minimum pressure loss between inlet and outlet:** 25 cm
- **Connectable area:** 1000 m² to 2000 m² depending on the degree of treatment level
- **Maximum flow rate:** 35 l/s
- **Maximum filtration capacity:** 12 l/s

APPROVALS AND VERIFICATIONS

- Tested according to requirements of **DWA A 102**
- Tested in accordance with the **NRW regulations**
- Tested in accordance with the **NJDEP** protocol

GERMAN DIBT APPROVAL

NJDEP COMPLIANT

HYDROSYSTEM 1500

BIG IS BEAUTIFUL

- *Hydrosystem with a diameter of 1.50 m*
- *Tripling of the connected area in comparison with the Hydrosystem 1000*
- *In plastic or concrete*
- *All functions identical to Hydrosystem 1000*

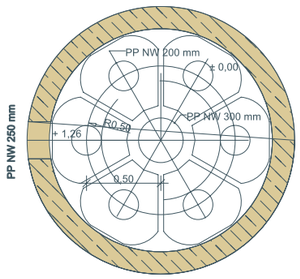

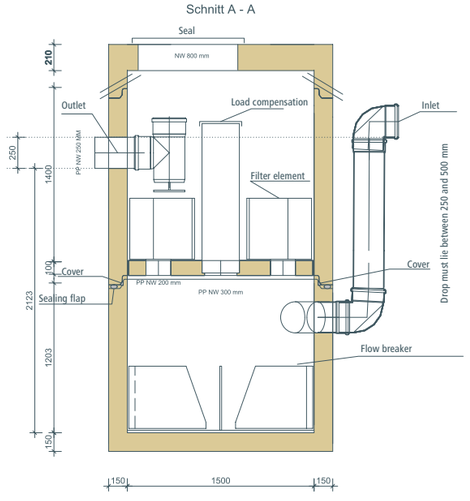

The Hydrosystem 1500 is the big brother of the Hydrosystem 1000. It is installed in the factory in a plastic or concrete shaft with an internal diameter of 1.5 m.

A hydrodynamic separator brings about the sedimentation of solids in a radial flow regime characterised by secondary flows.
Through the effect of the separator, the solids enter the flow-calmed sludge trap located underneath the separating funnel.
There are six filter elements above the separation chamber. The water flows upwards through the filter elements. The system removes pollutants such as heavy metals, mineral oil hydrocarbons and polycyclic aromatic hydrocarbons from the stormwater. Apart from that it binds nutrients such as phosphates. The quality of the cleaned water is so high that it can be discharged directly into the seepage or any receiving sewer.
The height difference between inlet and outlet is only 25 cm. As the system is installed under the traffic area, it needs no additional space on the property or in the road space.
The treatment plant can be used with traffic areas such as car parks and roads with all volumes of traffic, industrial areas and metal roofs. Four different filter cartridges are available for this. In comparison with the smaller Hydrosystem, about three times the area can be connected to the treatment plant.
The outlet is fitted with an immersion pipe for retaining the light density matter. The sludge trap can be evacuated via the central maintenance pipe.

TECHNICAL DATA

- **Internal diameter of the concrete or plastic shaft:** 1.5 m
- **Minimum height loss between inlet and outlet:** 25 cm
- **Connectable area:** 1600 m² to 3200 m² depending on the degree of treatment level
- **Maximum flow rate:** 105 l/s
- **Maximum filtration capacity:** 24 l/s

APPROVALS AND VERIFICATIONS

- General building authority approval from the **DIBt** for seepage Z-84.2-22
- Tested according to requirements of **DWA A 102**
- Tested in accordance with the **NJDEP** protocol

FUNCTIONAL PRINCIPLE

1. The stormwater from the area to be drained is fed in at the lower end of the **shaft**. The water is tangentially deflected by the deflector.
2. Here, the sedimentation of particles and in particular the sand fraction takes place in a **hydrodynamic separator** on account of turbulent secondary flows in a radial laminar flow regime.
3. The particles are caught in a **sludge trap** underneath the system via an opening in the lower part of the cleaning shaft. The sludge trap is evacuated at intervals.
4. There are six **filter elements** in the centre of the cleaning shaft, with which the fines are filtered in an upward flow process and the majority of the dissolved pollutants are precipitated and adsorptively bound. The filter can be backwashed from above and is easy to replace in case it is fully silted up.
5. The **filter elements** are easy to remove via the existing shaft opening.
6. The clean water is located above the filter elements; it passes through an oil separator and then flows via the **outlet** into the seepage or a surface water.

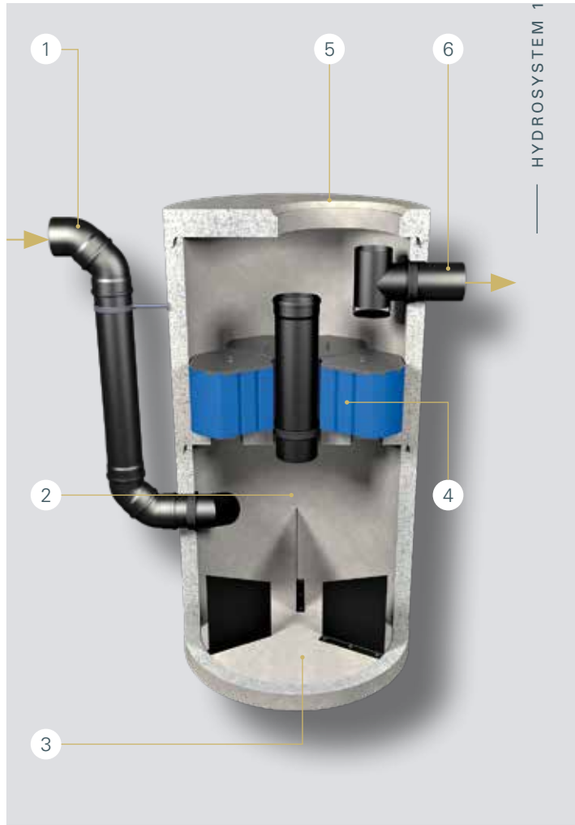

HYDROSYSTEM 400

THE SOLUTION FOR SMALL AREAS

- ***Hydrosystem with a diameter of 40 cm***
- ***A filter cartridge that can be sent with a parcel service***
- ***Sludge bucket for simple maintenance***
- ***All functions identical to Hydrosystem 1000***

The Hydrosystem 400 is the little brother of the Hydrosystem 1000.

It is made of plastic and has an internal diameter of 400 mm. It can be installed in a shaft or located directly in the storage tank or in a seepage shaft. There are special mounting brackets for these cases. A round filter cartridge forms the heart of the system. The water initially flows tangentially via a DN 100 pipe into a hydrodynamic separator. From there it passes upwards through the central filter element into the outlet. A DN 70 emergency overflow ensures that no backflow occurs even with heavy rain or a blocked filter.

So that the system can be maintained and cleaned by the operator, there is a sludge bucket underneath the filter that can simply be emptied into the domestic waste. The filter cartridge can be backwashed with the garden hose. Maintenance is thus easy even without special knowledge and instruction. The Hydrosystem 400 carries the Bavarian State Approval for metal roof run-offs. There are two different filter cartridges for this purpose of use – one for copper and one for zinc roofs.

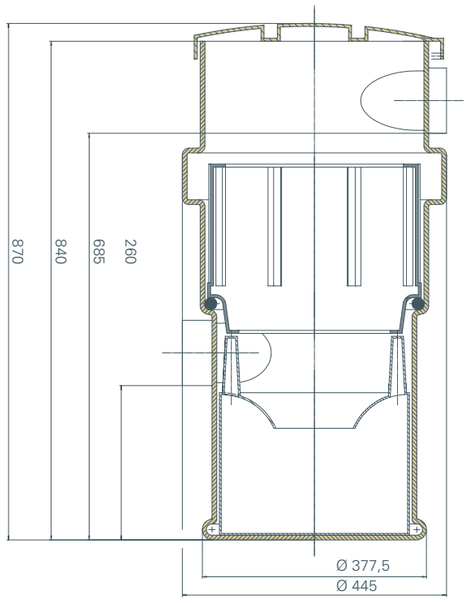

TECHNICAL DATA

- **Internal diameter:** 400 mm
- **Minimum pressure loss between inlet and outlet:** 25 cm
- **Connectable area:** 100 m² to 170 m² depending on the degree of treatment level
- **Maximum flow rate:** 7 l/s,
- **Maximum filtration capacity:** 2 l/s

APPROVALS AND VERIFICATIONS

- Approved in accordance with the **Bavarian Water Act for metal roof run-offs**

FUNCTIONAL PRINCIPLE

1. The stormwater enters the system via the **inlet pipe,**
2. from where it flows into the **hydrodynamic separator.**
3. A radial **flow regime** is generated in the separator. Solids are separated downwards.
4. The solids are collected in a **sludge trap** underneath the system that must be emptied at location-specific intervals.
5. The water flows upwards through a **filter element.**
6. The **filter cartridge** is easy to replace.
7. The cleaned water flows via the **outlet** into the storm sewer or a seepage system.

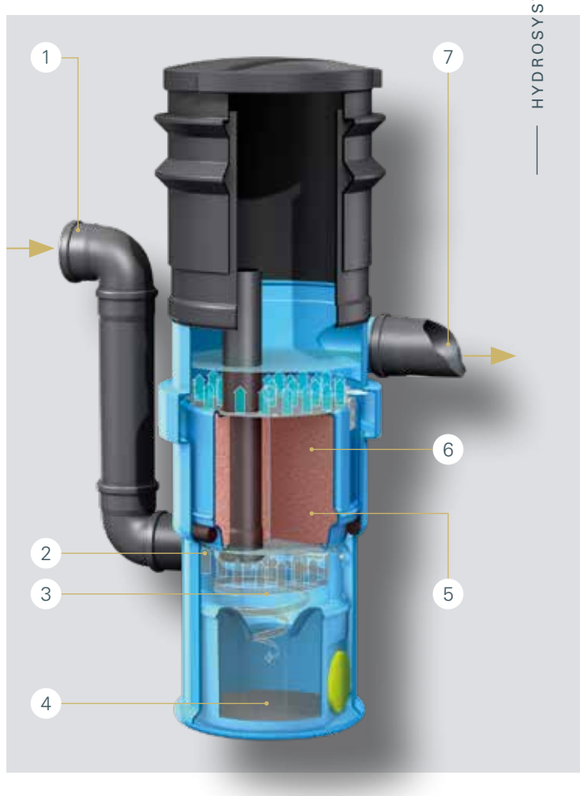

GERMAN DIBT APPROVAL

NJDEP COMPLIANT

HYDROSYSTEM 10000

THINK BIG

- ***Modular filter system for large connected areas and high flow rates***
- ***Individually adapted filter structure with Hydrosystem 1000 or Hydrosystem 1500 units***
- ***Two-stage system, sedimentation unit and filtration unit***
- ***Few operating points with large catchment areas***

For larger catchment areas or larger flow rates there is a possibility to individually combine a certain number of filter elements.

The sedimentation and filtration are separated for such filter structures; this means that a sedimentation plant has to be installed upstream of the actual filter system. Planning takes place in the individual case in accordance with the conditions of the catchment area and the cleaning goal.

The systems can be designed as filter units with direct inflow. Note that each filter compartment has to be closed off for maintenance purposes.

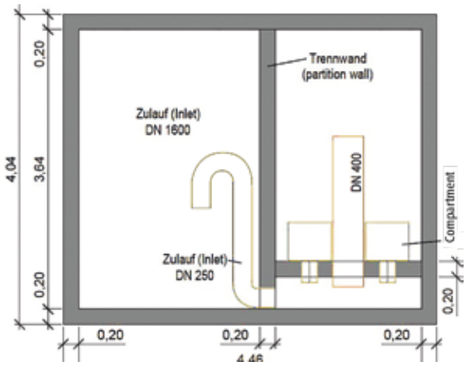

TECHNICAL DATA

- **Dimensions of the structure:** project-related
- **Minimum height loss between inlet and outlet:** 25 cm
- **Connectable area:** > 10000 m² depending on the degree of soiling and the cleaning goal
- **Maximum flow rate:** project-related
- **Maximum filtration capacity:** project-related

APPROVALS AND VERIFICATIONS

- Tested in a **field trial** on a motorway in Giessen
- Tested according to requirements of **DWA A 102**
- Tested in accordance with the **NJDEP** protocol

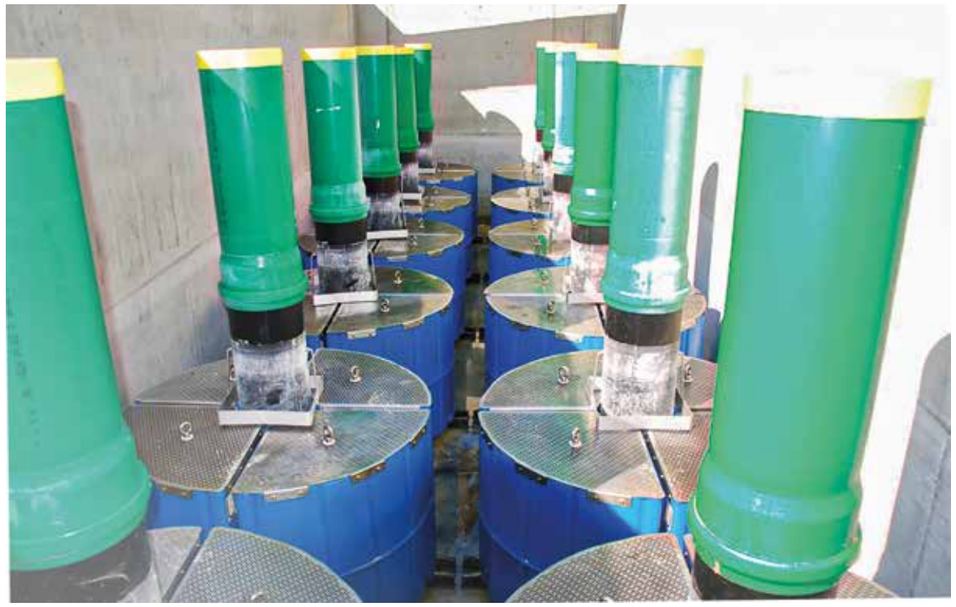

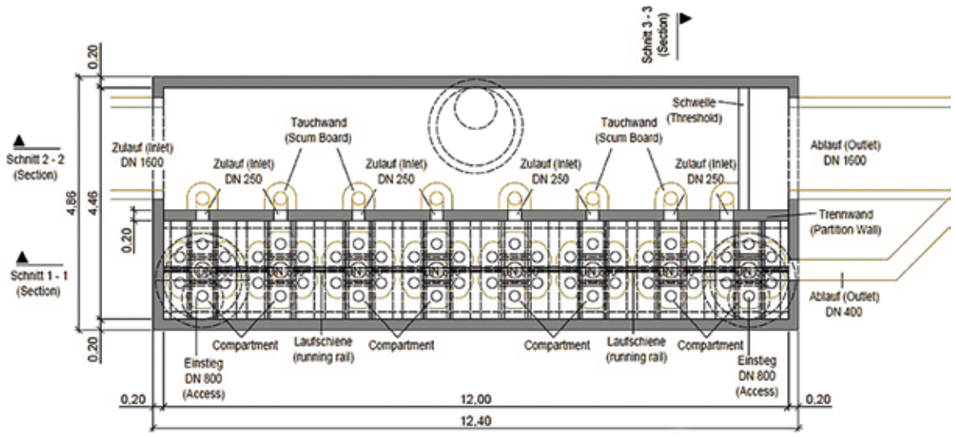

HYDROSYSTEM 10000

GERMAN DIBT APPROVAL

NJDEP COMPLIANT

HYDROSYSTEM ROAD DRAIN

THE GULLY NEW INVENTED

- ***Treatment of contaminated stormwater from traffic areas***
- ***System is located in the road drain, no space requirement***
- ***Simple inspection and cleaning***
- ***Filter material in cartridge***
- ***Filter exchange interval of between 3 and 5 years***
- ***Connectable area between 100 and 400 m² depending on the cleaning goal***
- ***General building authority approval from the DIBt***
- ***Usable in accordance with the NRW separation decree (on LANUV list)***

The Hydrosystem Road Drain combines a hydrodynamic separator with a filter unit in a road drain and is simple to inspect and clean.

The system requires no additional space as it is located directly in the road space. The filter material is located in a cartridge that is exchanged at intervals of between 3 and 5 years.

The filter system removes pollutants such as heavy metals, mineral oil hydrocarbons and polycyclic aromatic hydrocarbons from the stormwater. Apart from that it binds nutrients such as phosphates. The combination of solids separator and filter works both on particles and on dissolved water ingredients.

The treatment plant can be used with traffic areas such as car parks and roads with all volumes of traffic. Three different filter cartridges are available for this. Even heavily contaminated stormwater run-offs can be cleaned to the extent that they can be discharged into surface waters or the groundwater. The modular design allows use in virtually all catchment areas.

TECHNICAL DATA

- **Internal diameter of the concrete or plastic shaft:** > 0.4 m
- **Rectangular shaft forms** are also possible
- **Depth of the outgoing pipe:** > 60 cm
- **Connectable area:** 100 m² to 400 m² depending on the degree of treatment level
- **Maximum flow rate:** 15 l/s,
- **Maximum filtration capacity:** 2 l/s
- Three different filters are available, **different cleaning capacities**

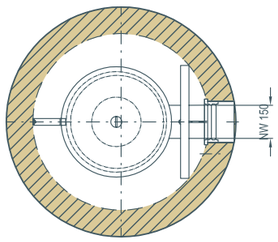

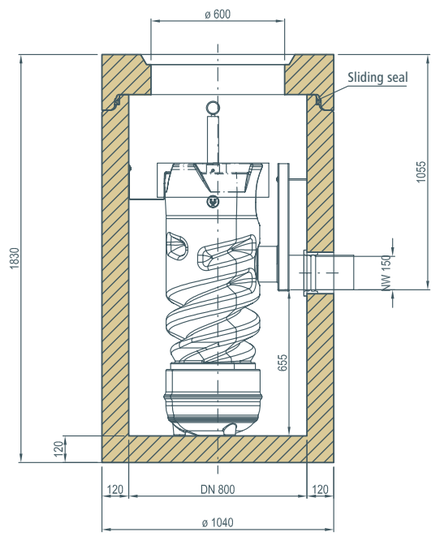

APPROVALS AND VERIFICATIONS

- General building authority approval from the **DIBt**, Z-84.2-17
- On the **LANUV list in NRW**
- Tested according to requirements of **DWA A 102**

FUNCTIONAL PRINCIPLE

1. The stormwater flows via a **scumboard** into the system,
2. from where it flows via two channels into the **hydrodynamic separator.**
3. A radial **flow regime** is generated in the separator. Solids are separated downwards.
4. The solids are collected in a **sludge trap** underneath the system that must be sucked off at location-specific intervals.
5. The water flows upwards through a **filter element.**
6. The **filter cartridge** is easy to replace.
7. The cleaned water flows via the **outlet** into the storm sewer or a seepage system.

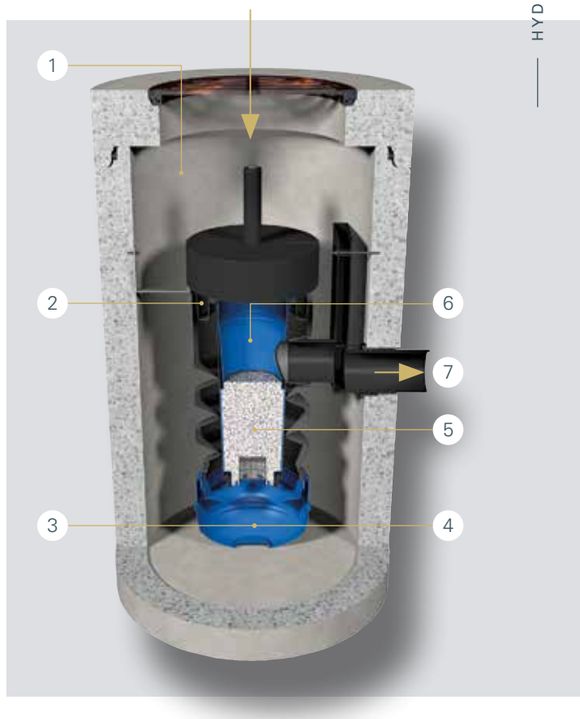

GERMAN DIBT APPROVAL

NJDEP COMPLIANT

HYDRO FILTER CHANNEL

LINEARITY FOR OPTIMUM RESULTS

- ***Sedimentation and filter system in drainage channel***
- ***Treatment of stormwater run-offs from traffic areas***
- ***Usable up to load class F***
- ***Close to the surface, no large height offset***
- ***Simple inspection and maintenance***
- ***No spilt filter material thanks to filter cushion***
- ***Filter cushion exchange interval > 10 years***
- ***Longer use of the filter cushion possible through substrate inspection***
- ***Also usable as sedimentation channel only***

The drain with cleaning function has several advantages over other systems.

The treatment of the water takes place directly under the surface of the terrain, therefore the system is simple to inspect and maintain. The filter material is not placed loose in the channel, it is contained in cushions. These are simple to remove and clean. According to the building authority approval the filter cushions only have to be replaced after 10 years.

The filter system removes pollutants such as heavy metals, mineral oil hydrocarbons and polycyclic aromatic hydrocarbons from the stormwater.

Apart from that it binds nutrients such as phosphates. The combination of solids separator and filter works both on particles and on dissolved water ingredients. The treatment plant can be used with traffic areas such as car parks and roads with all volumes of traffic as well as industrial areas. Stormwater run-offs can be cleaned to the extent that they can be discharged into surface waters or the groundwater.
The modular design allows use in virtually all catchment areas.
Maintenance is straightforward and can be carried out by your own personnel. No special equipment is necessary.

TECHNICAL DATA

- **Nominal internal width of the channel:** 0.30 m
- **Connectable area:** 20 m² to 150 m² depending on the degree of treatment level
- **Design rainfall intensity:** 300 l/(s·ha)
- **Maximum flow rate:** 0.6 l/s·m
- **Maximum filtration capacity:** 0.6 l/s·m

APPROVALS AND VERIFICATIONS

- General building authority approval from the **DIBt**, Z-84.2-10
- Tested according to requirements of **DWA A 102**
- On the **LANUV list of the State of NRW**
- Tested in accordance with the **NJDEP** protocol
- **In-situ** measurements available

FUNCTIONAL PRINCIPLE

1. The water flows from both sides into the **drain channel**
2. The **sedimentation box** removes coarse materials such as leaves and sand from the water. A rubber seal prevents water flowing around the channel.
3. The water pre-treated in this way is fed to a **filter cushion**, where it is cleaned through filtration, adsorption, chemical precipitation and biological conversion.
4. The **cleaned water** collects underneath the filter and be seeped on site or discharged into a surface water.

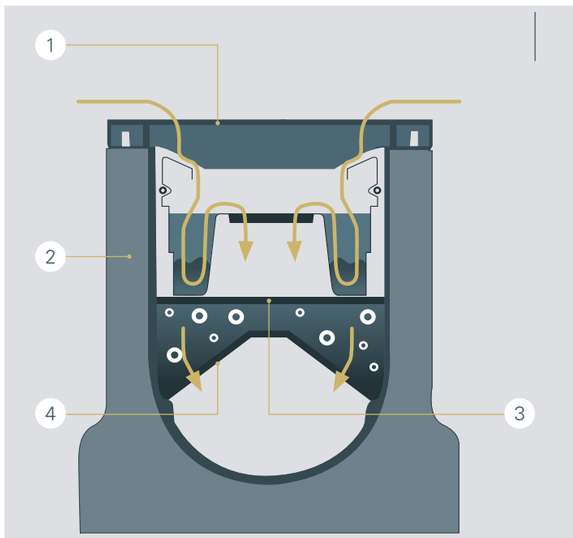

HYDRO FILTER CHANNEL

GERMAN DIBT APPROVAL

PAVING SYSTEM ECOSAVE PROTECT

BETTER FOR THE WATER BALANCE

- ***Water-permeable pavement with cleaning function***
- ***Continuous seepage capacity > 270 l/(s·ha)***
- ***Run-off co-efficient 0.0 possible***
- ***Camber of the roads and car parks only 1%***
- ***Flexible design with all possible surfaces***
- ***Many formats possible***
- ***Joint width meets DIN requirements***
- ***Rule-compliant construction***
- ***Annual evaporation up to 50% possible***

Water-permeable pavings from the ECOSAVE protect line carry a DIBt approval as a storm-water treatment plant.

This means that the tested systems are capable of filtering, converting and /or degrading ecologically risky pollutants so that our bodies of water including groundwater can be protected.Therefore, the pavements are also permitted for traffic areas on which conventional eco-pavings are taboo today.

This means traffic areas such as residential streets, car and lorry car parks or yard and commercial areas with more than 300 vehicle movements daily. These areas must in any case be paved for use by traffic. With ECOSAVE protect it is now possible to treat stormwater decentrally in these sensitive areas in keeping with water protection - in other words, to simply let it seep away.

The stormwater flows via the joints or the porous concrete stones into the substrate. In the new condition the permeability of the systems must be higher than 540 l/(sxha) – much more than any stormwater or mixed water sewer can accept. The pollutants are mainly collected in the top two centimetres of the joint material.
The seepage capacity reduces over the course of time. Therefore, the pavements must be re-generated after about 10 to 15 years using a suitable cleaning method. A large part of the pollutants is removed and disposed of in the process.The top two centimetres of the joint are renewed.

A special hybrid stone can do much more than this. It stores the stormwater in a lightweight aggregate concrete storage layer. The facing concrete layer of the concrete stone is impermeable; the water only penetrates into the concrete stone via the joints. Up to 10 mm precipitation are stored intermediately and given off to the atmosphere again after the rain event. Only excess water is seeped. Annual eva-poration rates of up to 50% can thus be attained. The green surface for road traffic.

ECOSAVE

TECHNICAL DATA

- Paving for **load classes** up to 3.2 according to RStO (Guidelines for the standardisation of the superstructures of traffic areas)
- Cleaning function with **DIBt approval**
- **Permeability in new condition** > 200 mm/h
- **Permanent permeability** > 100 mm/h
- **Run-off co-efficient** 0.0 possible
- **Hydraulic conductivity** up to soil k_f $1 \cdot 10^{-6}$ m/s
- **Discharge** via subgrade drainage is necessary in case of lower k_f values

APPROVALS AND VERIFICATIONS

- General building authority approval from the **DIBt**
- Paving system gd-protect Z-84.1-13
- Paving system hp-protect Z-84.1-14
- Conforms to all rules for the paving construction method in Germany
- Meets the requirements of the **data sheet for seepage-capable traffic areas** (MVV) of the FGSV (German Road and Transportation Research Association)
- Meets the requirements of the **DWA A 138**
- **In-situ** measurements available
- Proof of the evaporation performance from **in-situ** measurements is available

FUNCTIONAL PRINCIPLE

1. The stormwater flows via the **joints** into the lightweight aggregate core concrete
2. When this storage layer is completely full, excess water seeps away via the **subgrade**
3. The rain run-off is cleaned in the **joints** and in the **concrete**
4. Following the rain event, the stored water **evaporates** into the atmosphere via the joint

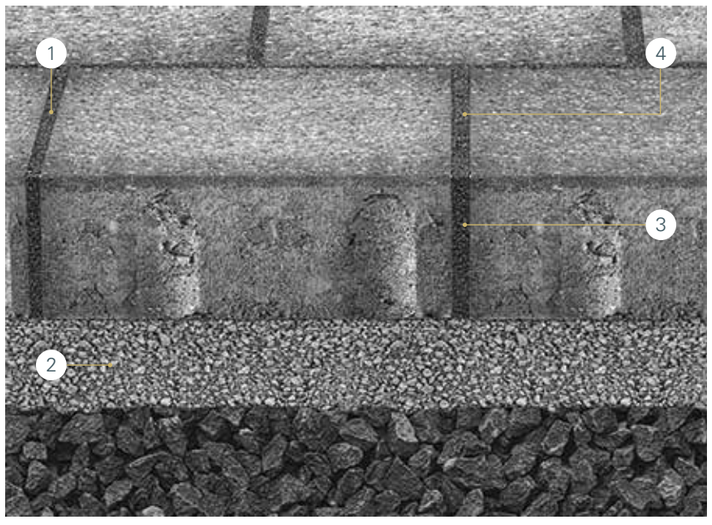

ECOSAVE

RUN-OFF REGULATORS

WE CAN'T LET EVERYTHING THROUGH

- ***Run-off regulators from 1.0 l/s to 30 l/s***
- ***Run-off only slightly dependent on water level***
- ***Patented functional principle with float***
- ***Low maintenance***
- ***No energy requirement***
- ***Tested up to 1.75 m water level***

Heavy rain events are placing our sewer systems under increasing loads. The number of record rain events has been increasing worldwide since the 1990s. The consequences are urban flash flooding and enormous damage to buildings and the urban infrastructure. The existing sewers are no longer adequately dimensioned.

Local retention measures are urgently required in order to take the load off sewers and small bodies of water and to prevent flooding.

To do this, storage volumes are created on properties or in the communal space. In the ideal case, the run-off from the retention space is limited to a fixed maximum value, irrespective of the fill level in the storage tank. The ideal regulator is wishful thinking, but we have gotten very close to the goal with our run-off limiters.

The new generation of large system regulators is ready for use. Through the dynamic opening of the flap in conjunction with a float, the flow rate is continuously adapted to the water level. A homogeneous run-off is thus achieved even if the water level in the storage tank changes.

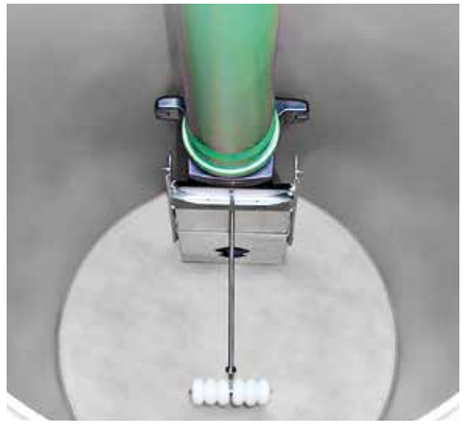

TECHNICAL DATA

- For installation in a concrete or plastic shaft
- **Run-off quantities** from 1.0 l/s to 30 l/s
- **Material** polyethylene and stainless steel
- **Size of the storage tank / shafts** dependent on the type of regulator

APPROVALS AND VERIFICATIONS

- **Test records** available for all regulators

REGULATOR 4.5 L/S

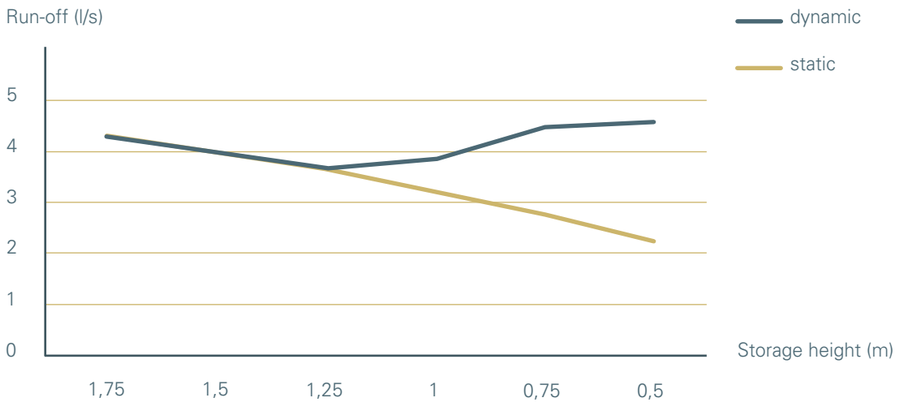

RETENTION REGULATORS

WE CAN'T LET EVERYTHING THROUGH

- ***Run-off regulators from 0.1 l/s to 0.4 l/s***
- ***Run-off only slightly dependent on water level***

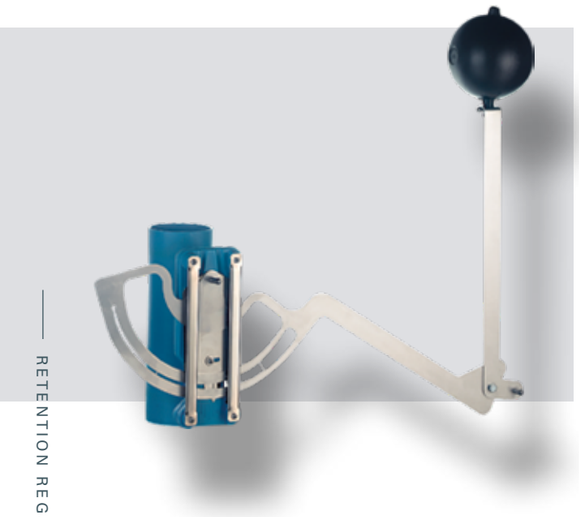

The 3P retention regulator ensures a regular, predefined run-off.

The regulation quantity is adjustable (5 steps). The movable arm and the brushes attached to the regulator ensure that the regulator opening does not get dirty and thus requires little maintenance. As opposed to a conventional static run-off regulator, the run-off from the 3P retention regulator adapts itself to the current water level in the storage facility so that the maximum permissible run-off is attained right at the beginning of the filling of the storage tank. With conventional regulator elements the largest permissible run-off rate is generally attained at the highest water level in the retention facility. At lower storage levels the regulator output reduces accordingly.
Using a 3P retention regulator, therefore, the necessary retention volume can be reduced by about 30%. The 3P retention regulator also has the advantage over a static regulator that a blockage or loosening of the outlet opening cannot occur. Depending on the water level, the sickle-shaped plate in front of the opening is moved so that any existing dirt is continuously scraped off with the help of a pair of brushes. This ensures that decentralised retention on private properties is guaranteed in the long run without maintenance effort.

TECHNICAL DATA

- **Run-off quantities** from 0.1 l/s to 0.4 l/s
- **Blue regulator body:** DN 100
- **Material:** Polyethylene
- **Material of sickle plates and arm:** Stainless steel of various alloys
- **Material of float ball:** Polyethylene
- **Material of brushes:** PVC and polyethylene
- Suitable for DN 1000 **shafts**

APPROVALS AND VERIFICATIONS

- **Test records** available for all regulators

FLOW REGULATORS

REGULATORS WITH SWIMMING BADGES

- ***Run-off regulators from 0.07 l/s to 12.07 l/s***
- ***Run-off only slightly dependent on water level***

Connection DN 100
0.07 to 0.45 l/s

Connection DN 100
0.66 to 1.64 l/s

Connection DN 100
0.83 to 3.85 l/s

Connection
DN 150

3.68 to
12.07 l/s

3P run-off regulator for retention tanks.
Built like a floating sampler with float ball and filter basket. The regulator element is situated between the filter basket and the hose nozzle.
The regulator quantity is adjusted on the regulator element. The connection is attached at the height of the outlet. The regulator element is situated between the filter basket and the brass nozzle. It consists of graduated sections that can be cut off in accordance with the desired regulator quantity.

TECHNICAL DATA

- **Run-off quantities** from 0.07 l/s to 12.07 l/s
- **Size of the storage tank / shafts** dependent on the type of regulator
- **Float ball:** from 14 cm diameter
- **Material:** Polyethylene
- **Intake hose:** differs depending on the regulator
- **Material of the connecting parts:** Brass
- **Material of the hose clips:** Stainless steel

APPROVALS AND VERIFICATIONS

- **Test records** available for all regulators

MAINTENANCE & CLEANING

FOR GOOD MAINTENANCE

Treatment plants for stormwater run-offs must be inspected and serviced at **regular intervals**, otherwise the sludge traps will overfill and block the filter. To make this as simple as possible, there are of course **maintenance instructions** for all 3P systems. In addition to that we offer training courses in which the maintenance of the systems is explained in a practically orientated manner.

As required by the DIBt approvals, we offer maintenance contracts for the systems throughout Germany in cooperation with Börder GmbH. And at fixed price to boot. So you know exactly what you're letting yourself in for. It couldn't be more transparent.

HYDROSYSTEM FAMILY

An **annual service** is normally sufficient for the Hydrosystems. This includes:

- Checking the sludge level
- Checking the permeability of the filter
- Flushing the filter inside or outside the shaft
- Checking the flushing result

The following are also necessary:

- Replacement of the filter elements after 3 to 5 years or checking the contamination
- Extracting the sludge on reaching the maximum height

HYDROSYSTEM 400

The Hydrosystem 400 is simple for the operator to service. The following work is necessary **once per year:**

- Removal and flushing of the filter cartridge with a garden hose or high-pressure cleaner
- Emptying of the sludge bucket into the household waste

The following are also necessary:

- Replacement of the filter elements after 3 to 5 years or checking the contamination

HYDROSYSTEM ROAD DRAIN

The filter gully requires **two services per year.** This includes:

- Emptying of the foliage bucket
- Extracting the sludge
- Backwashing the filter
- Alternatively exchanging the filter for a flushed cartridge and cleaning at a central washing place

The following are also necessary:

- Replacement of the filter elements after 3 to 5 years or checking the contamination

HYDRO FILTER CHANNEL

The following **annual checks** and work are necessary for the channel filtration:

- Visual inspection of the system
- The condition and fill level of the sludge collection chambers must be checked.

At intervals of **between one and three years**:

- Emptying of the sludge collection chamber

After **ten years** at the earliest:

- Exchange of the filter cushion or checking the contamination in order to be able to use the cushion further.

ECOSAVE PROTECT

The paving clogs up due to the solids from the rain run-off and must also be inspected and serviced. The following work is necessary after **ten years:**

- Checking the seepage capability of the paving
- The paving must be cleaned if the values lie below 270 l/(sxha)
- The joint material must be refilled afterwards
- Experience shows that the paving must be cleaned after 10 to 15 years

MAINTENANCE & CLEANING

PLANNING & DIMENSIONING

WE WON'T LEAVE YOU STANDING IN THE RAIN

- ***Planning service for your project***
- ***Help with dimensioning***
- ***Advice on submitting a drainage application***
- ***Advice regarding stormwater fees***

M 153, A 138, A 102, DIBt, LNAUV, NJDEP – is everything clear? If you're a professional when it comes to rules, then our dimensioning specifications, approvals and tendering texts will help you. If transmission values, coefficients of permeability, filtrable solids and average daily traffic volumes sound Double Dutch to you, we'll help you – quickly, without problems and in a goal-oriented manner.

The all-round no-worries package for your project or application.

STORMWATER KNOWS NO BOUNDS

EUROPE Germany I United Kingdom I France I Italy I Lithuania I Ireland I Greece I Austria I Slovenia I Switzerland I Benelux I Spain I Poland I Portugal I Scandinavia I Finland I Croatia ASIA Dubai I China I Korea I Australia I New Zealand I Malaysia SOUTH AMERICA BRAZIL NORTH AMERICA California I Mexico AFRICA South Africa

Water is our most important foodstuff and every human being has the right to clean water. That's why it has to be protected worldwide. We help you with that and are there for you.

Robert-Bosch-Straße 16 - 18
D-73337 Bad Überkingen
T +49 (0) 7334-92460 -0
F +49 (0) 7334-92460 -99
info@3ptechnik.de
www.3ptechnik.de

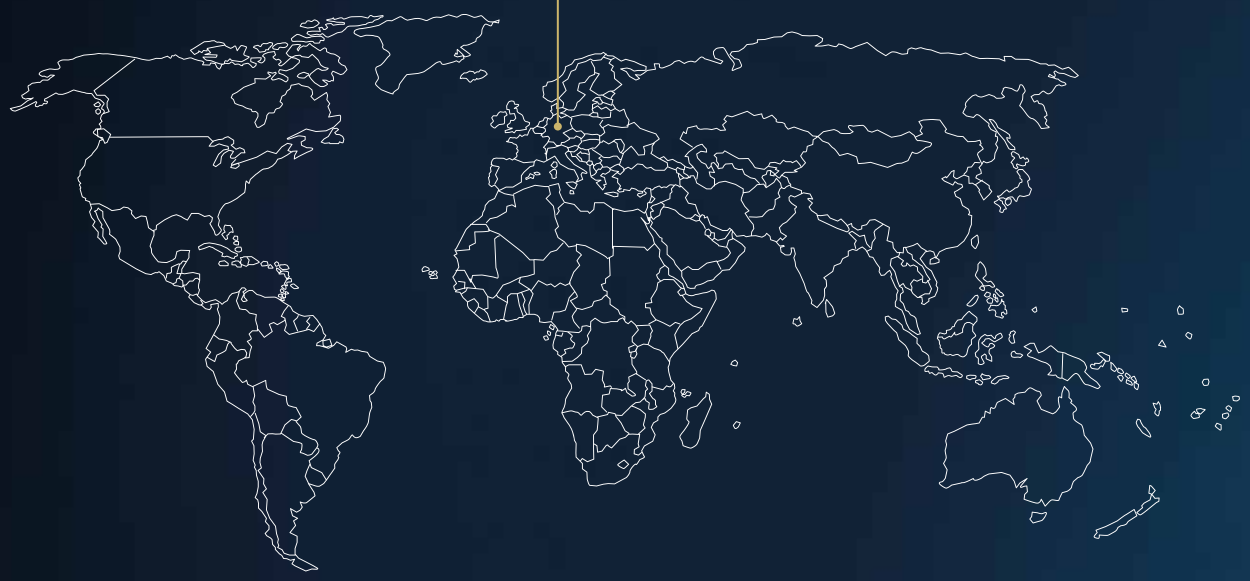

3P Technik Filtersysteme GmbH